Features

- Rated supply voltage 5.0 V
- Accurate 5% or 10% microprocessor power supply monitoring
- Programming of watchdog timer overflow time
- Generation of reset signals at power on for correct microprocessor start

The chip contains reference voltage source, analog comparator, Watchdog timer, circuit for monitoring power supply deviation accuracy.

General Description

CBM1232 is designed to monitor power supply within the system of reset signal generation for microprocessors. It is used in monitor systems for controlling var-ious processes and entities.

Functions

- Reset signal generation after power failure/ error
- Reset signal generation from external "RESET" pushbutton
- Reset signal generation from watchdog timer

CATALOG

Pin Configurations

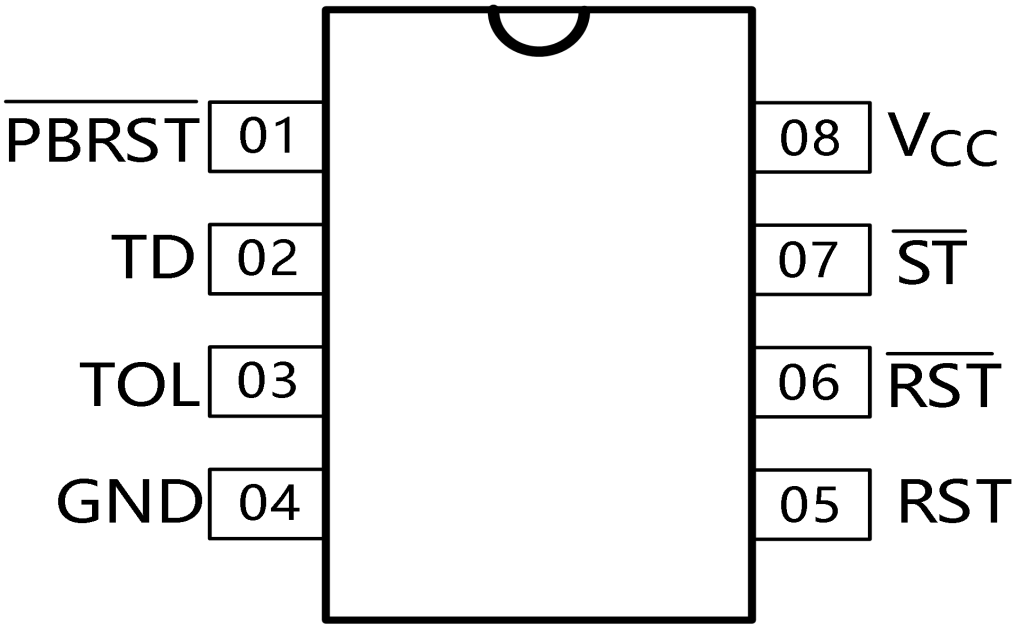

Fig 1 – PIN ASSIGNMENT

Pin Description

Pin	Symbol	Description
01	$\overline{PBRST}$	Pushbutton reset input
02	TD	Time Delay Set
03	TOL	Selects 5% or 10% V_{CC} Detect
04	GND	Ground
05	RST	Reset output (Active High)
06	$\overline{RST}$	Reset output (Active Low, open drain)
07	$\overline{ST}$	Strobe Input
08	V_{CC}	Supply output from voltage source

Absolute Maximum Ratings

Symbol	Parameter	Typical		Units
		Min	Max	
V_{CC}	Supply voltage	-	7.0	V
V_{IH}	Input voltage, high level	-	7.0	V
V_{IL}	Input voltage, low level	-1.0	-	V
T_A	Operating temperature range	-40	+85	℃
T_{STG}	Storage temperature	-60	+125	℃

* Stresses beyond those listed under "absolute maximum ratings" may cause permanent damage to the device. These are stress ratings only and functional operation of the device at these or any other conditions beyond those indi-cated under "recommended operating conditions" is not implied.

Exposure to absolute-maximum-rated conditions for extended periods may affect device reliability.

Recommended Operating Conditions

Symbol	Parameter	Typical		Units
		Min	Max	
V_{CC}	Supply voltage	4.5	5.5	V
V_{IH}	Input voltage, high level	2.0	V_{CC}+0.3	V
V_{IL}	Input voltage, low level	-0.3	0.8	V
T_A	Operating temperature range	-20	+70	℃

Dc Electrical Characteristics (T_{AMB} = -40℃ to +85℃)

Symbol	Parameter	Test conditions	Typical		Units
			Min	Max	
I_{LIL1}	Input leakage current, low level, $\overline{ST}$, TOL	V_{CC}=5 V±10%, V_{IL}=0 V	-	-1	μA
I_{LIL2}	Input leakage current, low level, TD	V_{CC}=5 V±10%, V_{IL}=0 V	-	-300	μA
I_{LIL3}	Input leakage current, low level, $\overline{PBRST}$	V_{CC}=5 V±10%, V_{IL}=0 V	-	-1000	μA
I_{LIH1}	Input leakage current, high level, $\overline{ST}$, TOL	V_{CC} =5 V±10%, V_{IH}=V_{CC}	-	1	μA
I_{LIH2}	Input leakage current, high level, TD	V_{CC} =5 V±10%, V_{IH}=V_{CC}	-	300	μA
I_{OH}	Output current, high level, RST	V_{CC} =5 V±10%, V_{OH}=2.4 V	-8	-	μA
I_{OL}	Output current, low level, RST, $\overline{RST}$	V_{CC} =5 V±10%, V_{OL}=0.4 V	8	-	mA
V_{OH}	Output voltage, high level, RST	V_{CC} =5 V±10%, I_{OH}= -500 μA	V_{CC}-0.5	-	V
V_{OH1}	Output voltage, high level,- RST	V_{CC} =2 V, I_{OH}= -500μA	V_{CC}-0.5	-	V
V_{OL}	Output voltage, low level, RST	V_{CC} =2 V, I_{OL}=1 mA	-	0.4	V
I_{CC}	Operating current	V_{CC} =5 V±10%	-	2	mA
$V_{CC\ TP1}$	V_{CC} trip point	TOL = GND	4.5	4.74	V
$V_{CC\ TP2}$	V_{CC} trip point	TOL = V_{CC}	4.25	4.49	V

AC electrical characteristics (T_{AMB} = -40℃ to +85℃)

Symbol	Parameter	Test conditions	Typical		Units
			Min	Max	
T_{TD1}	Watchdog timer overflow time	V_{CC} =5.0 V±10% ,T_{ST}≥20 ns TD = GND	62.5	250	ms
T_{TD2}		TD disconnected	250	1000	ms
T_{TD3}		TD = V_{CC}	500	2000	ms
T_{PDLY}	PBRST stable low to RST and $\overline{RST}$	V_{CC} =5.0 V±10% T_{PB}≥20 ms	-	20	ms
T_{RST}	Reset active time	V_{CC} =5.0 V±10% T_{PB}≥20 ms	250	1000	ms
T_{RPD}	V_{CC} fail detect to RST and $\overline{RST}$	V_{CC} =from 5.0 to 4.0 V T_F±10μs	-	175	μs

T_{RPU}	V_{CC} detect to RST and $\overline{RST}$ transition	V_{CC} = from 5.0 to 4.0 V $T_R \geq 1\mu s$	250	1000	ms

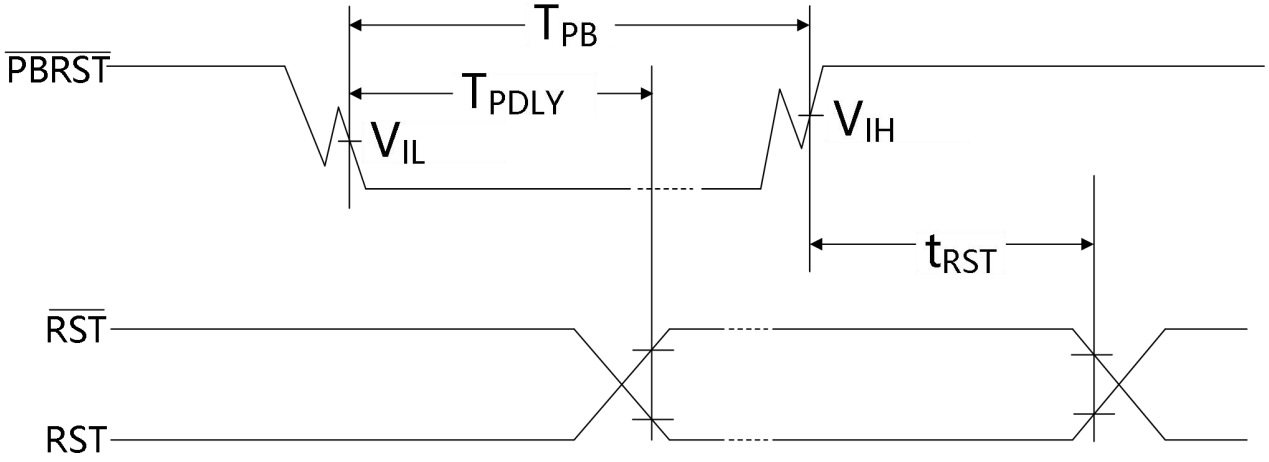

Fig. 2 – Timing diagram of forming reset signal from external PBRST control button

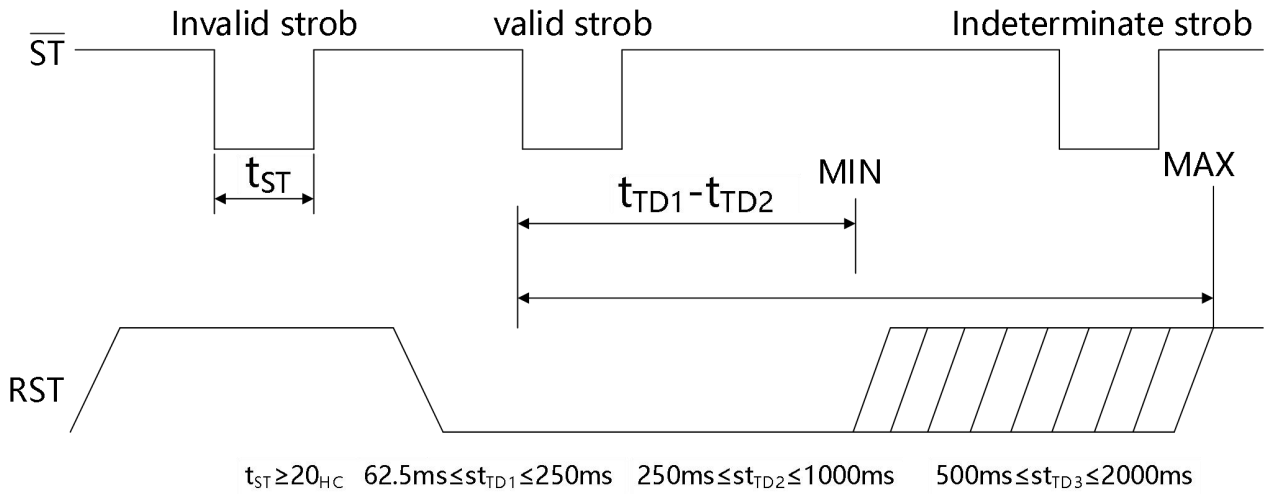

Fig. 3 – Timing diagram : Strobe input

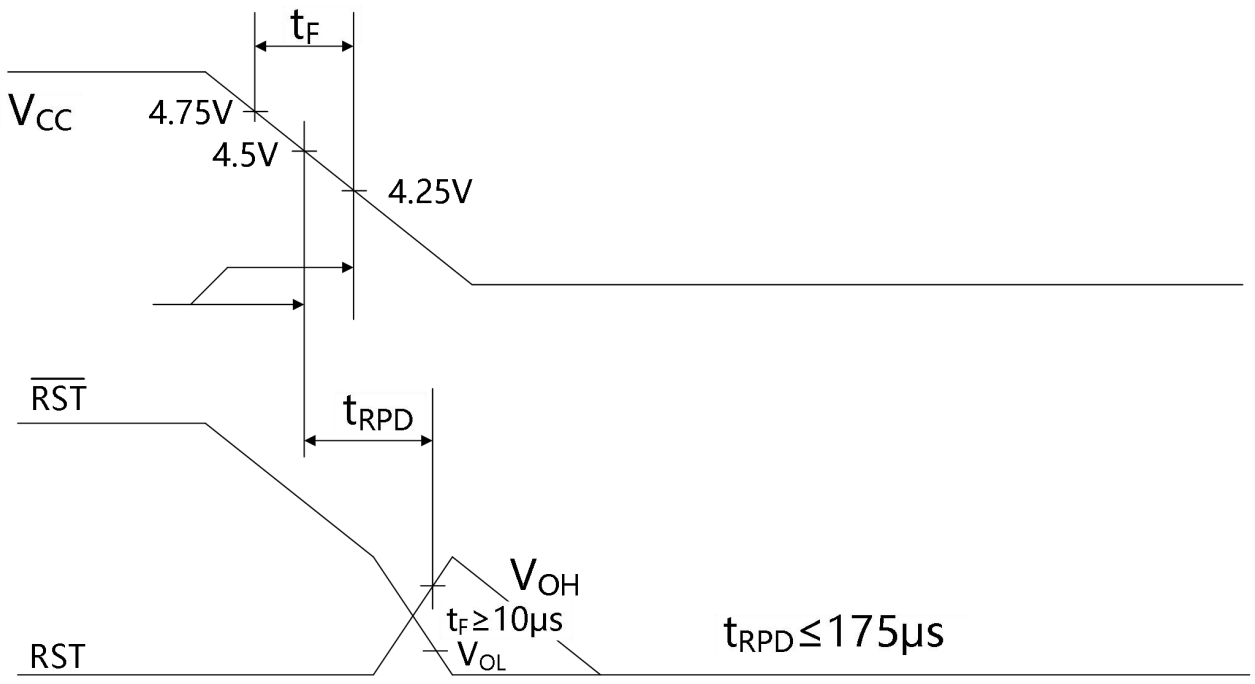

Fig. 4 – Timing diagram: power error / down to V_{CCTP}

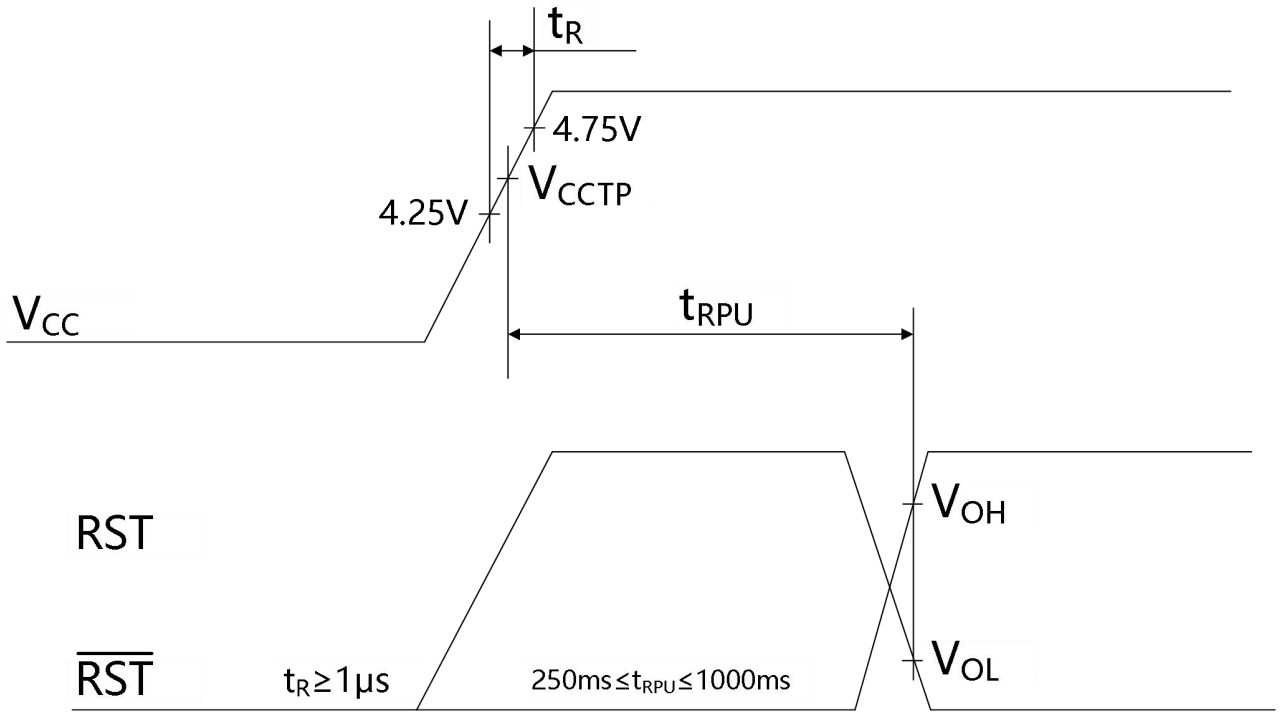

Fig. 5 – Timing diagram: Power-Up/ Stable

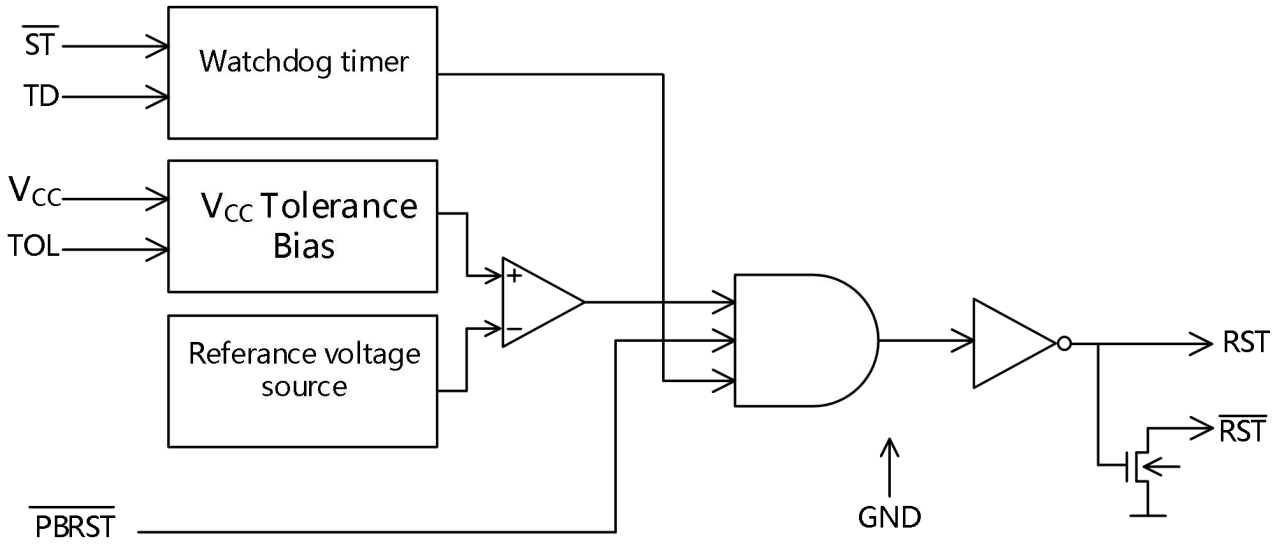

Fig.6 Block diagram

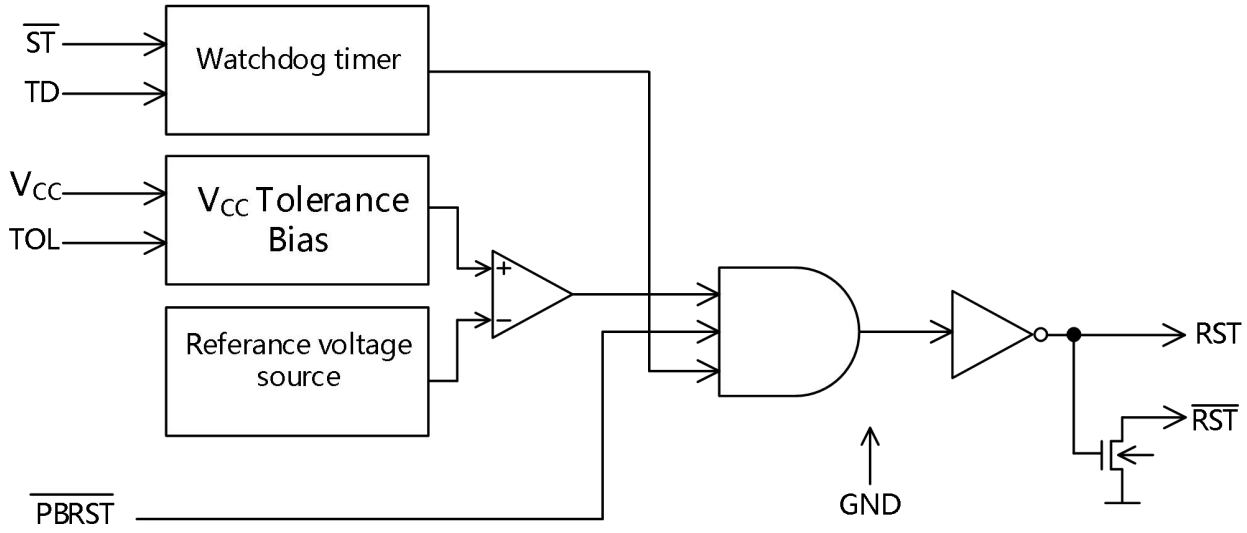

Fig.7 Application Circuit : Watchdog Timer

Package Information

DIP8

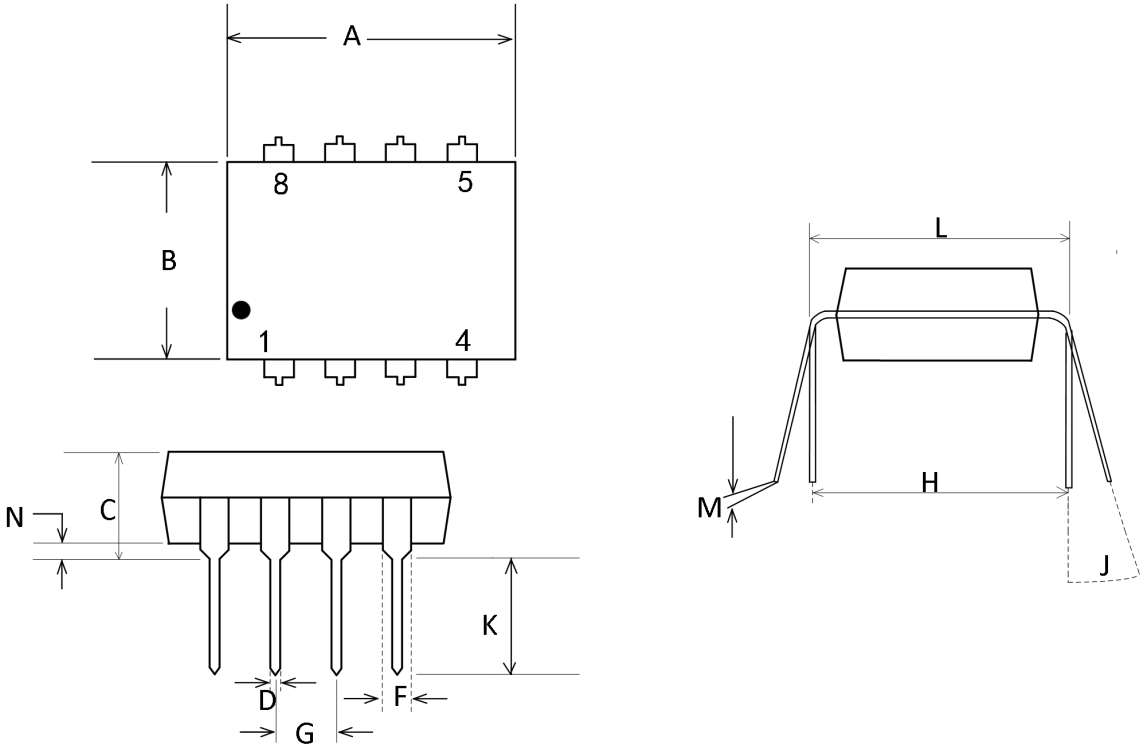

NOTES:

Dimensions "A", "B" do not include mold flash or protrusions. Maximum mold flash or protrusions 0.25mm(0.010) per side.

Symbol	Dimension, mm		Symbol	Dimension, mm	
	MIN	MAX		MIN	MAX
A	8.51	10.16	H	7.62	
B	4.10	7.11	J	0°	10°
C		5.33	K	2.92	3.81
D	0.36	0.56	L	7.62	8.26
F	1.14	1.78	M	0.20	0.36
G	2.54		N	0.38	

SOP8

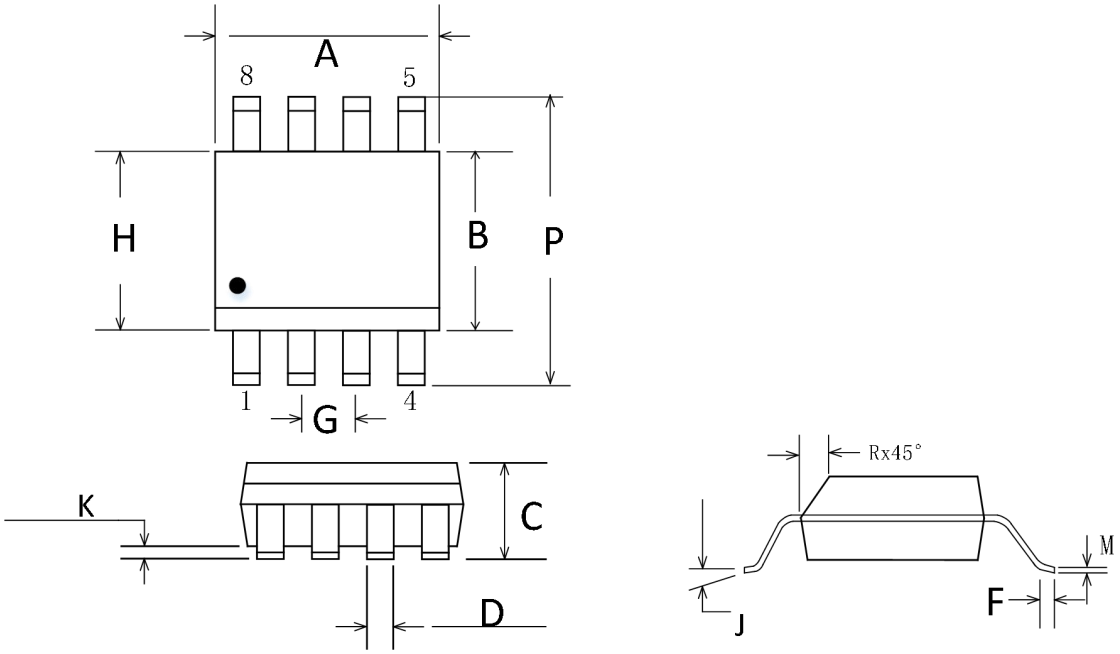

NOTES:

1. Dimensions A and B do not include mold flash protrusion.
2. Maximum mold flash or protrusion 0.15mm(0.006) pre side for A; for B -0.25mm(0.010) per side.

Symbol	Dimension, mm		Symbol	Dimension, mm	
	MIN	MAX		MIN	MAX
A	4.80	5.00	H	5.72	
B	3.80	4.00	J	0°	B
C	1.35	1.75	K	0.10	C
D	0.33	0.51	M	0.1	D
F	0.40	1.27	P	5.80	F
G	1.27		R	0.25	0.50

Package/Ordering Information

PRODUCT TYPE	OPERATING TEMPERTURE	PACKAGE	PAKEAGE MARKING	NUMBER OF PACKAGES
CBM1232AS8	-40℃~85℃	SOP-8	CBM1232A	Tape and Reel, 2500
CBM1232AS8-RL	-40℃~85℃	SOP-8	CBM1232A	Tape and Reel, 3000
CBM1232AS8-REEL	-40℃~85℃	SOP-8	CBM1232A	Tape and Reel, 4000
CBM1232ADP8	-40℃~85℃	DIP-8	CBM1232AD	Tube.50